Gearing up for a new supercritical CO_2 power cycle system

By Junior Isles

Toshiba has almost completed detailed design in preparation for a turbine that will use carbon dioxide as the working fluid.

The case for building new coal fired plants or back-fitting existing coal plants with carbon capture technology is economically unattractive. The case for equipping gas-fired plants with carbon capture and storage (CCS) is even more difficult to justify.

High capital cost, combined with the penalty in efficiency that the capture process places on the power plant, has so far proved to be a major stumbling block in the commercial deployment of power plants with CCS.

A solution that has been under serious development for the last 5 or 6 years, however, has now reached the stage where the key component – a new type of turbine and combustor – is close to the start of manufacturing.

The turbine and combustor, being designed and built by Toshiba, essentially combine gas turbine and steam turbine technologies, with the potential to deliver a power plant with:

- Efficiency of about 59% (LHV) when running on natural gas
- Efficiency of 51-52% (LHV) when running on gasified coal (syngas)
- Full 100% carbon capture at 300 bar without any efficiency penalty.

Since 2012, Toshiba has been developing a new turbine and combustor for the new CO_2 power cycle together with NET Power, CB&I, Exelon and 8 Rivers Capital. The five companies have now completed major agreements to build a 25MW gross electric (50MWt) demonstration plant in Texas.

Through the successful completion of operating tests, the demonstration plant is intended to provide the basis for construction of the first 295MWe full-scale commercial plant.

CO_2 power cycle

NET Power LLC was formed almost six years ago by 8 Rivers Capital, a technology commercialization firm based in North Carolina (and inventor of the supercritical CO_2 power cycle) with a clear and different approach to tackling the problem of burning fossil fuels more cleanly.

Instead of trying to "fix" supercritical coal, IGGC (integrated gasification combined cycle) or natural gas combined cycle power plants, 8 Rivers looked at designing a fossil based system from scratch that achieves the desired end result. The cycle produces pipeline-ready CO_2 and no air emissions without reducing plant efficiency or increasing costs.

In 2009, Rodney Allam, a former head of technology development at Air Products, joined the company to work on a new thermodynamic cycle so all the emissions are controlled from the outset.

Process description

The cycle is not a combined cycle. Instead, it exploits the special thermodynamic properties of carbon dioxide

25MWe Demo Plant. Design features a single can-type combustor and double-shell turbine structure, scaled-down model of a 250-300MWe turbine design for a commercial plant.

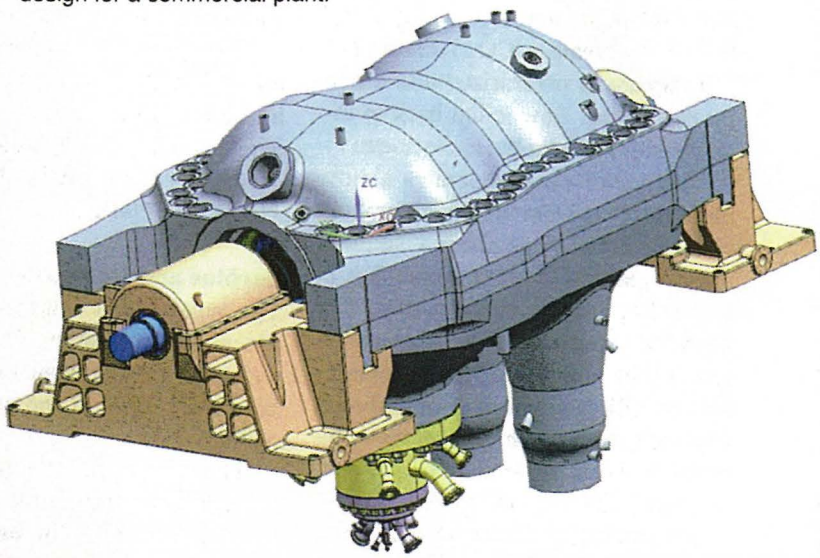

as a working fluid by eliminating the energy losses that steam-based cycles encounter due to the heat of vaporization and condensation.

According to the company, the Allam Cycle (named after its lead inventor) removes the steam Rankine Cycle from the process and improves upon the simpler, more efficient Brayton Cycle. The Allam Cycle combusts natural gas or synthetic gas (derived from a coal gasification system) with pure oxygen (oxyfiring), as opposed to burning gas with air.

Following a Brayton Cycle-like expansion across its turbine, CO_2 is recirculated back to the beginning of the cycle in a highly recuperative process. The system eliminates the expensive steam cycle components and avoids the inefficiencies of traditional Rankine cycles.

This process generates a relatively pure stream of high pressure carbon dioxide and some water while significantly reducing or eliminating other pollutants such as NOx. At very high pressures, CO_2 exhibits a greater energy density and work output, enabling the cycle to reach extremely high efficiencies.

The working fluid is expanded through a turbine that has an inlet pressure in the range of 200 bar to 400 bar and a pressure ratio between 6 and 12. It is then cooled through a heat exchanger, and H_2O is separated from it to create a CO_2 stream. The CO_2 stream is pressurized and a major part of this flow is fed back to the combustor to begin the cycle anew.

This novel cycle separates almost all of the CO_2 from the other combustion products, producing a sequestration-ready CO_2 byproduct that is at pipeline quality and pressure. The need for a separate CO_2-capture system is thus eliminated. There is therefore no efficiency penalty of adding a capture process, which can typically result in a loss of around 10 per cent in overall electrical efficiency.

An important factor in achieving high net cycle efficiency is to use a high turbine inlet temperature. This temperature, however, is limited by the maximum allowable temperature of turbine exhaust that flows directly into the heat exchanger.

The operating temperature at the hot end of the heat exchanger is thus in the range of 700°C to 750°C. This leads to a typical turbine inlet temperature constraint in the range of 1100°C to 1200°C.

Turbine and combustor

The turbine and combustor are new pieces of equipment for this cycle, and their development includes combining gas turbine and steam turbine technologies.

The turbine inlet temperature of the cycle is not high for gas turbines, but it is very high for steam turbines. Similarly, the pressure of this cycle does not surpass that of advanced steam turbines, but it is extremely high for gas turbines. The combustor has been designed to cope with a gas pressure of 300 bar, which is more than 10 times the gas pressure utilized in conventional gas turbines.

Turbine: In developing the turbine, Toshiba has set out to use proven technology as much as possible. It has also designed a commercial scale turbine in the 250-300MWe (500MWt) size range and scaled it down to build a 25MWe (50MWt) demonstration unit. This, it says, will mitigate risks and shorten development time of the full-scale machine.

Hideo Nomoto, Chief Fellow, Toshiba said: "Our plan is to construct the first commercial plant having two turbines and common BOP (balance of plant) for some part, and the to-

CO_2 Power Plant Project Partners

Toshiba, NET Power, CB&I, Exelon and 8 Rivers Capital are working together to develop and commercialize the application of supercritical carbon dioxide power cycle technology for efficient emissions-free electric power generation.

They have completed major agreements to build a 25MWe gross electric (50MWt) demonstration plant in the U.S. for test and evaluation that will provide the basis for the design and construction of a full-scale 295MWe commercial plant.

- Toshiba is to provide a first-of-a-kind turbine that will utilize supercritical CO_2 as a working fluid to produce low-cost electricity while eliminating NOx, CO_2 and other pollutants.
- CB&I to provide engineering, procurement and construction services including pre-FEED (front-end engineering design) and FEED studies for the demo plant and pre-FEED study of a commercial 500MWt power plant.
- Exelon, one of the leading competitive energy providers in the US, will be responsible for siting, permitting and commissioning the demo plant facility.
- NET Power will be responsible for project management, overall system engineering and integration, coordination between the partners.
- 8 Rivers Capital , inventor of the supercritical CO_2 cycle, will provide ongoing engineering and technology development services.

Timetable calls for Toshiba to begin delivery of key equipment to the demo plant site in August 2016. The completed plant is expected to enter the commissioning stage before the end of 2016.

Natural gas fired CO_2 cycle. Allam Cycle is expected to deliver 58-59% net efficiency (LHV) on natural gas fuel including 100% CO_2 capture at 300 bar.

Design Parameter	Gas HHV	Gas LHV
Gross efficiency	74.65%	82.70%
CO_2 compressor power	-10.47%	-11.60%
Plant parasitic power	-11.01%	-12.20%
Net Efficiency	**53.170%**	**58.90%**

Source: Toshiba, December 2014

tal plant size will be 500-600MWe range. The turbine for the demonstration plant is 25MWe and it is intended to be a scale-down of the commercial turbine as much as possible.

"It is difficult to quantify how much we can speed up the development. However, the scaled-down turbine is a necessary step to mitigate R&D risk and to demonstrate to our future customers that this technology is realistic and promising."

Describing the fundamentals of the turbine design, Nomoto said: "The easiest way to describe the turbine is that we need only a single HP turbine for this cycle. Since the pressure at the exhaust end of the turbine is 30 bar, we don't need an IP or LP. In a coal-fired plant, the steam turbine consists of HP, IP and LP sections. In a combined cycle plant, there's a gas turbine and a steam turbine with HP, IP and LP sections."

The new machine has a double shell structure (outer casing and inner casing), which is steam turbine technology that serves to contain the system's high pressure. The space between the inner casing and outer casing will be filled with a carbon dioxide cooling flow extracted from the lower temperature end of the plant.

The cooling technology enables the outer casing and larger inner casings to be designed using CrMoV casting. Ni-based material is used for the smaller, inner casing that encloses the

Supercritical CO_2 Allam Cycle (Natural Gas Fuel). The CO_2 working fluid is expanded through a turbine, cooled through a heat exchanger, followed by water separation to create a CO_2 stream which is then pressurized. A major part of the flow is fed back to the combustor to begin the cycle anew.

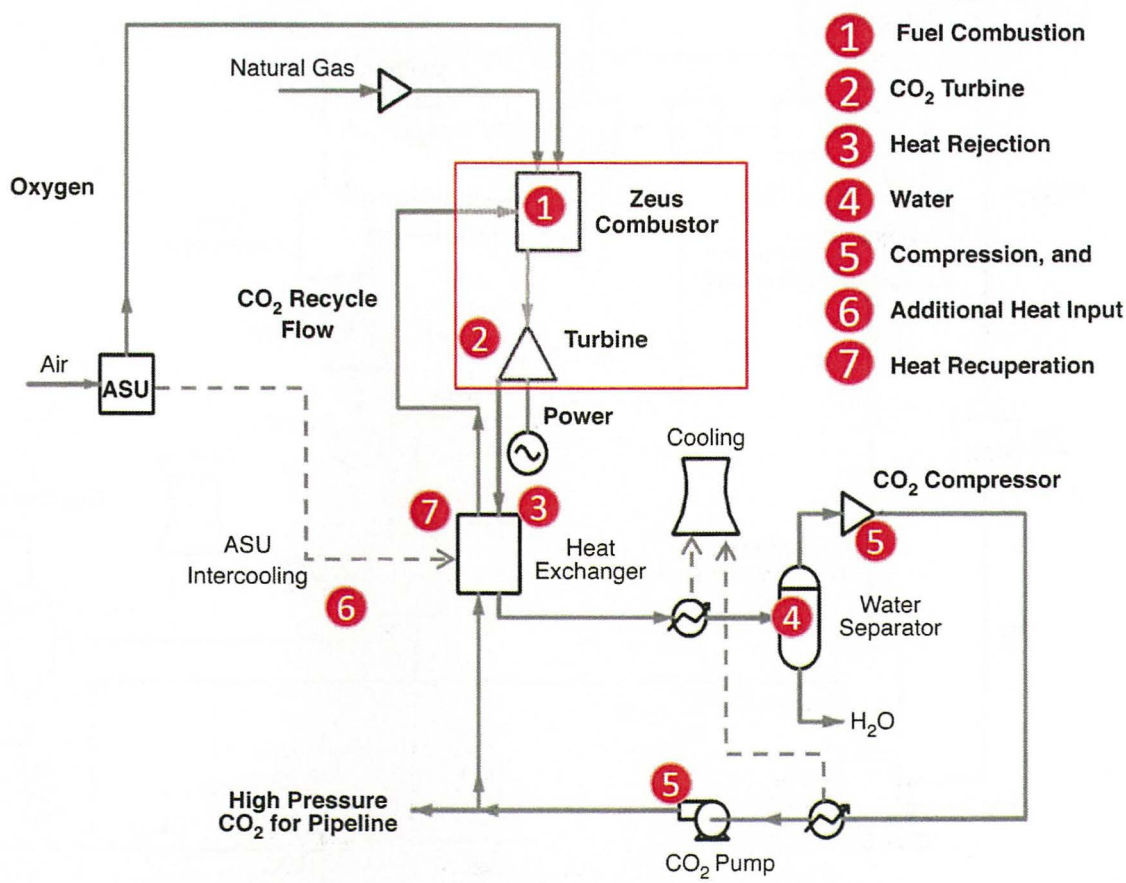

Coal based syngas fired CO_2 cycle. Allam Cycle is expected to deliver 51-52% net efficiency (LHV) on coal gasification fuel including 100% CO_2 capture at 300 bar.

Design Parameter	Syngas HHV	Syngas LHV
Gross efficiency	71.12%	74.91%
CO_2 compressor power	-10.25%	-10.78%
Plant parasitic power	-11.99%	-12.69%
Net efficiency	**48.88%**	**51.44%**

Source: Toshiba, December 2014

exhaust area, where temperatures are higher than 700°C and moderate cooling is applied.

In addition to using a welded rotor, the turbine design calls for the use of cooling technology. Cooling CO_2 is supplied to the rotor. This cooling flow is distributed to each stage through the rotor, which protects both the blade fixation and the moving blade.

Film cooling (which is generally used for high temperature gas turbines) is not needed because the inlet temperature is not extremely high, as compared to existing gas turbines, and because the heat transfer coefficient of the cooling flow is very high, making simple convection cooling very effective.

Combustor: The combustion process in this cycle is of critical importance because the working fluid and pressure is different from typical heavy-duty gas turbines. Major characteristics of this combustor are:

- Negligible NOx emissions because of the use of oxygen as opposed to air.
- Temperature is not as high as existing combustors for heavy frame gas turbines.
- Pressure is much higher than existing combustors.

Recent developments in combus-

Supercritical CO_2 Allam Cycle (Coal Syngas Fuel). The coal is gasified using a conventional partial oxidation gasifier. After going through several clean-up stages the clean syngas can be sent directly into the supercritical CO_2 combustor.

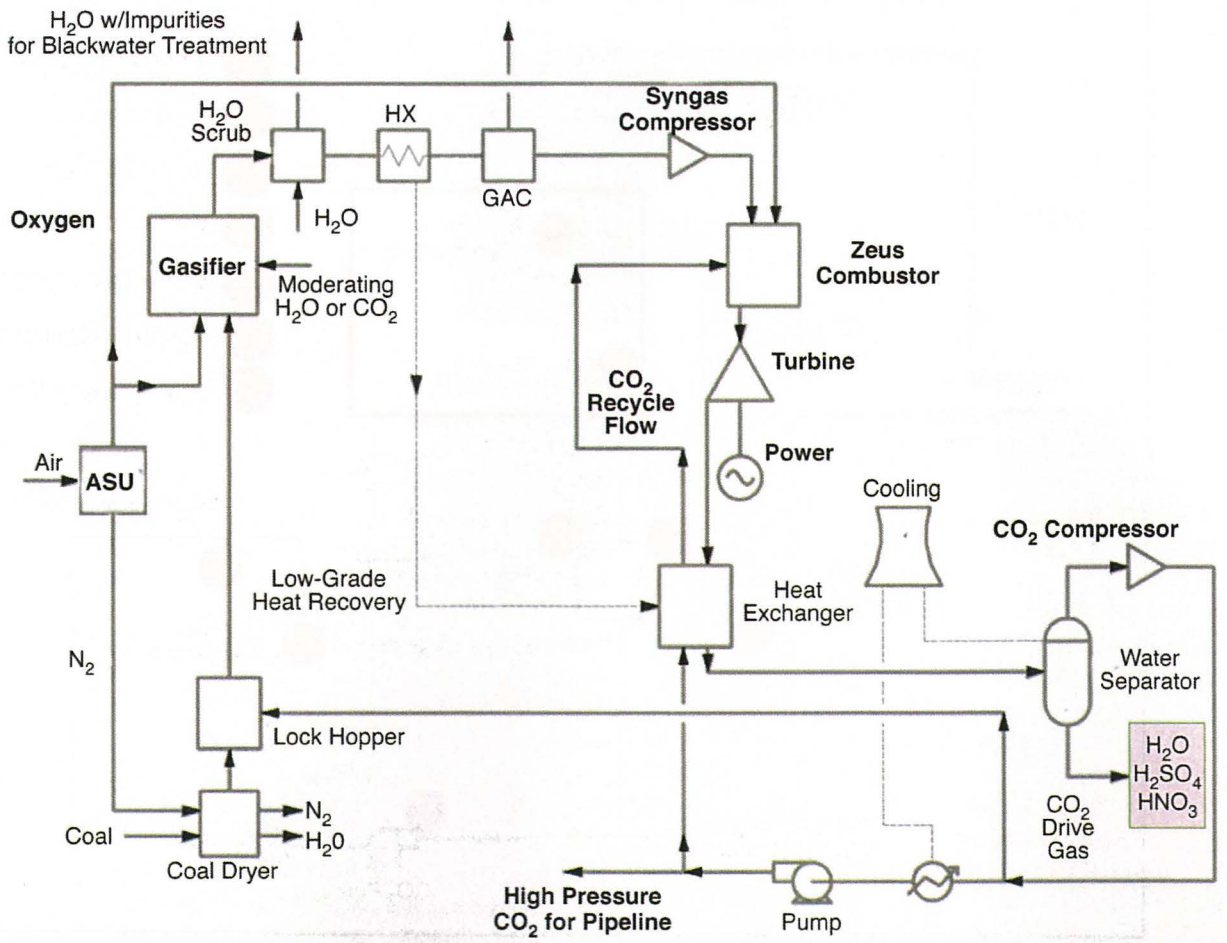

tors for heavy frame gas turbines have been focused on decreasing NOx emissions. This effort has led to the use of pre-mix combustion, in which fuel is mixed with air before combustion to enable lower temperature combustion. The disadvantage of premixed combustion, however, is that it causes system vibrations, called dynamics, due to flame instability.

The Allam Cycle has an advantage in this respect because it eliminates NOx while enabling adoption of simpler and more stable diffusion combustion. The system is also able to use proven cooling technology, such as back side convection cooling, due to the moderate temperature of combustion and the high cooling capability and availability of carbon dioxide.

Toshiba has been conducting a high-pressure rig test of an Allam Cycle combustor, scaled down by 1:5. Rig testing achieved its rated pressure of 300 bar in 2013. Since then, the company says it has continued the testing in order to get wide range of operational data.

Performance

A big advantage of the cycle compared to supercritical coal fired plant and combined cycle plants, is the efficiency – especially when taking into account the carbon capture.

NET Power and its partners have carried out cycle efficiency calculations that demonstrate that its targeted natural gas efficiency is competitive with current CCGT technologies that do not employ carbon capture.

The coal-fired Allam Cycle calculations demonstrate superior efficiencies to that of traditional supercritical pulverized coal and IGCC technologies that do not employ carbon capture.

Nomoto noted: "Ultra-supercritical coal plant efficiency is in the region of 42-43% (HHV). Present IGCC plants have almost the same efficiency, with future IGCC plants targeting 49%, although that would pose some technical difficulties. That's without carbon capture in all cases. This new cycle will achieve 51-52% on coal with 100% capture.

"The most advanced combined cycles are projected to achieve 62% efficiency (LHV) but this is without carbon capture. We will achieve 59%, with capture. Also, the efficiency is likely to increase as the technology matures."

There are also expected to be further efficiency gains as turbine inlet and therefore outlet temperature is increased beyond the current level of 1150°C.

"The heat exchanger inlet is the temperature limitation point for NET Power's cycle designs. This temperature is not very high since we have taken a conservative approach and don't want to use new materials for the heat exchanger," said Nomoto. "But we can enhance the inlet temperature, and raise the efficiency, if we want to use new materials in the future."

Efficiency gains for the air separation plant and compressors, the two largest parasitic loads for the system which have been included in all efficiency calculations, will further increase overall system efficiency. Several technologies are in development that can dramatically improve this aspect of plant performance.

Economics

The consortium suggests that the new cycle will have comparable or lower capital costs compared to CCGT, pulverized coal and IGCC plants, as much of the equipment associated with conventional technology can be eliminated.

For example, all of the steam elements of a combined cycle system can be eliminated, including the heat recovery steam generator, main steam piping, reheat steam piping, steam headers, and the entire three-stage (HP, IP, LP) steam turbine block.

In substitution, NET Power's system does include components that are not included in standard combined cycle plants, though, including most notably heat exchanger and air separation unit.

Because of its high pressure, the system is able to utilize smaller components and will thus have a smaller overall footprint than plants with a similar power output. Additionally, because of its closed-loop, oxy-fuel characteristics, the NET Power cycle is able to avoid many of the emissions control systems and components required by conventional fossil fuel plants.

Major components of a full-scale commercial NET Power natural gas plant can be prefabricated, leading to lower site erection costs and a shorter construction schedule compared to existing systems of a similar size.

NET Power argues that the economics of such a plant will be even more attractive when the CO_2 is used for enhanced oil recovery, gas recovery, or in a variety of industrial processes.

Commercialization

The project is now entering what is the third of four phases i.e. construction of the demonstration plant. After this, Phase 4 will see construction of a 295MWe plant.

The demonstration plant construction will be completed in 2016, and commissioning and testing will occur in 2017.

Nomoto noted: "We have almost finished fundamental design of the turbine and will do some more design work before starting actual manufacture. The date for shipping the turbine from our factory is September 2016."

Internal discussions are ongoing regarding when a commercial plant will be offered. However, Toshiba remains confident in the future of the technology.

"A lot of our customers around the world are watching this technology to see how things are progressing." Nomoto said. "If we did not think this technology was very promising, we would not have spent such a large amount of money to develop it." ■