The Allam Cycle offers leading efficiencies with full carbon capture

ALLAM CYCLE NATURAL GAS (full carbon capture)		
Energy Components	**HHV**	**LHV**
Gross Turbine Output	74.65%	82.7%
CO_2 Compressor Power	-10.47%	-11.6%
Plant Parasitic Auxiliary Power	-11.01%	-12.2%
Net Efficiency	**53.17%**	**58.9%**

Parasitic Load Breakdown	
ASU	91.8%
NG Compressor	8.2%

ALLAM CYCLE COAL (full carbon capture)		
Energy Components	**HHV**	**LHV**
Gross Turbine Output	71.12%	74.91%
CO_2 Compressor Power	-10.25%	-10.78%
Plant Parasitic Auxiliary Power	-11.99%	-12.69%
Net Efficiency	**48.88%**	**51.44%**

Parasitic loads provide opportunity to drive higher efficiencies in future

Parasitic Load Breakdown	
ASU	87.1%
Coal Slurry Pump	1.5%
Coal Slurry Chiller	0.6%
Misc.	10.8%

Other Allam Cycle Applications Have Major Benefits	
Solar/Natural Gas Hybrid	74% (LHV) natural gas efficiency
Water Desalination	Co-production of 50,000 m3/day
Direct EOR Integration	65% (LHV) efficiency

Courtesy from Net Power & 8Rivers

LIGNITE Energy COUNCIL

Increased performance, lower capital cost and reduced system complexity create a lower projected LCOE

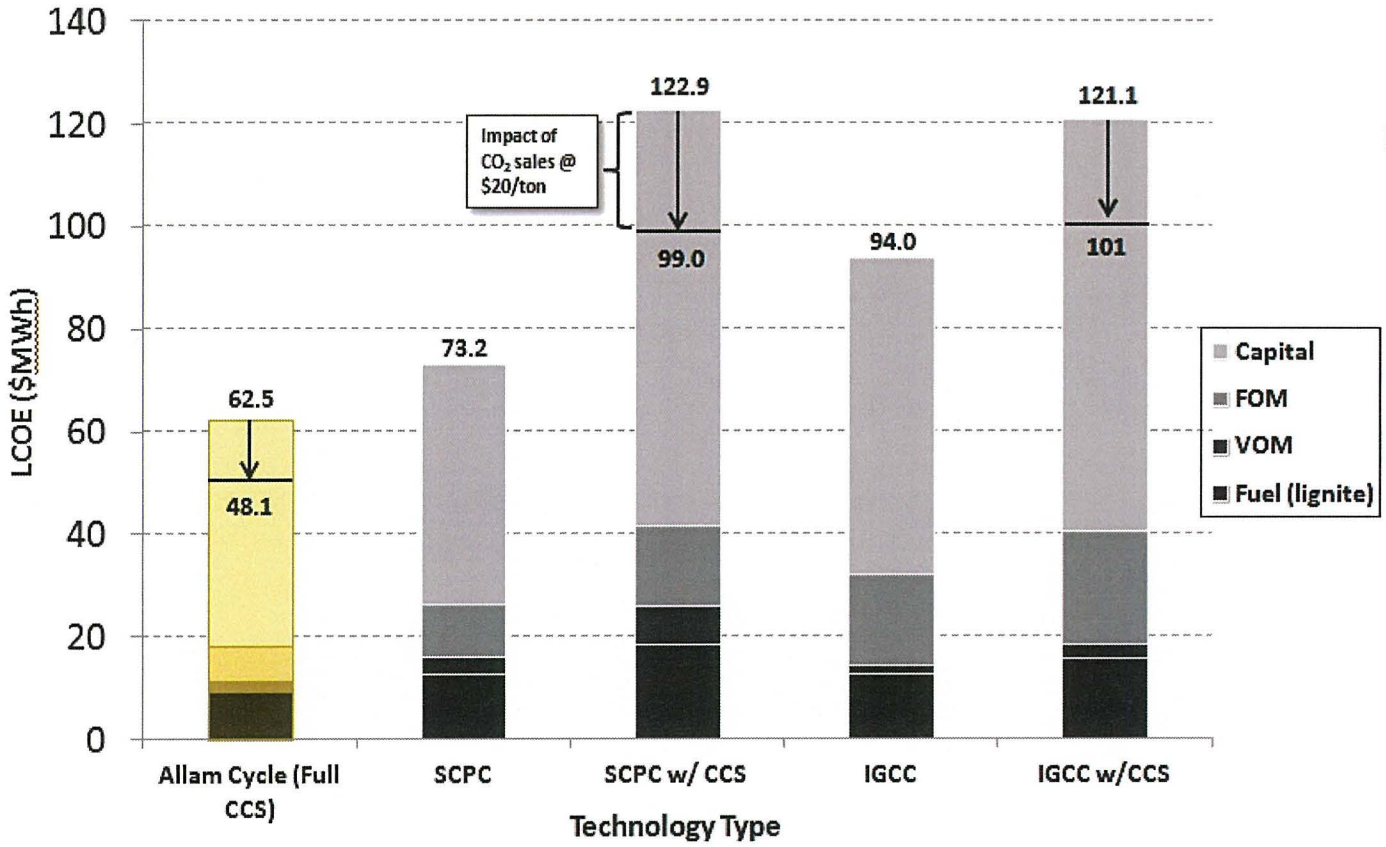

Reduction in costs from:

- ~~Steam turbine~~
- ~~HRSG~~
- ~~Steam piping/equipment~~
- ~~Water-gas shift reactor~~
- ~~COS hydrolysis~~
- ~~AGR/sulfur recovery unit~~
- ~~NO_x control unit/SCR unit~~
- ~~Syngas cooler~~
- ~~Solvents/catalysts~~

Notes

- Lu et al. Oxy-Lignite Syngas Fueled Semi-Closed Brayton Cycle Process Evaluation (2014)
- Total Plant Cost and O&M costs were estimated for lignite-fired system in conjunction with EPRI; AACE Class 5 estimate
- Cost data for other technologies is taken from NETL baseline reports (Vol. 3, 2011)

8 RIVERS

Contains the intellectual property of 8 Rivers Capital.

Allam Cycle Coal simplifies power from coal gasification

Additional required components:

1. Gasifier Island
2. Low-grade HX Syngas compression
3. Potential downstream $DeSNO_X$ Process

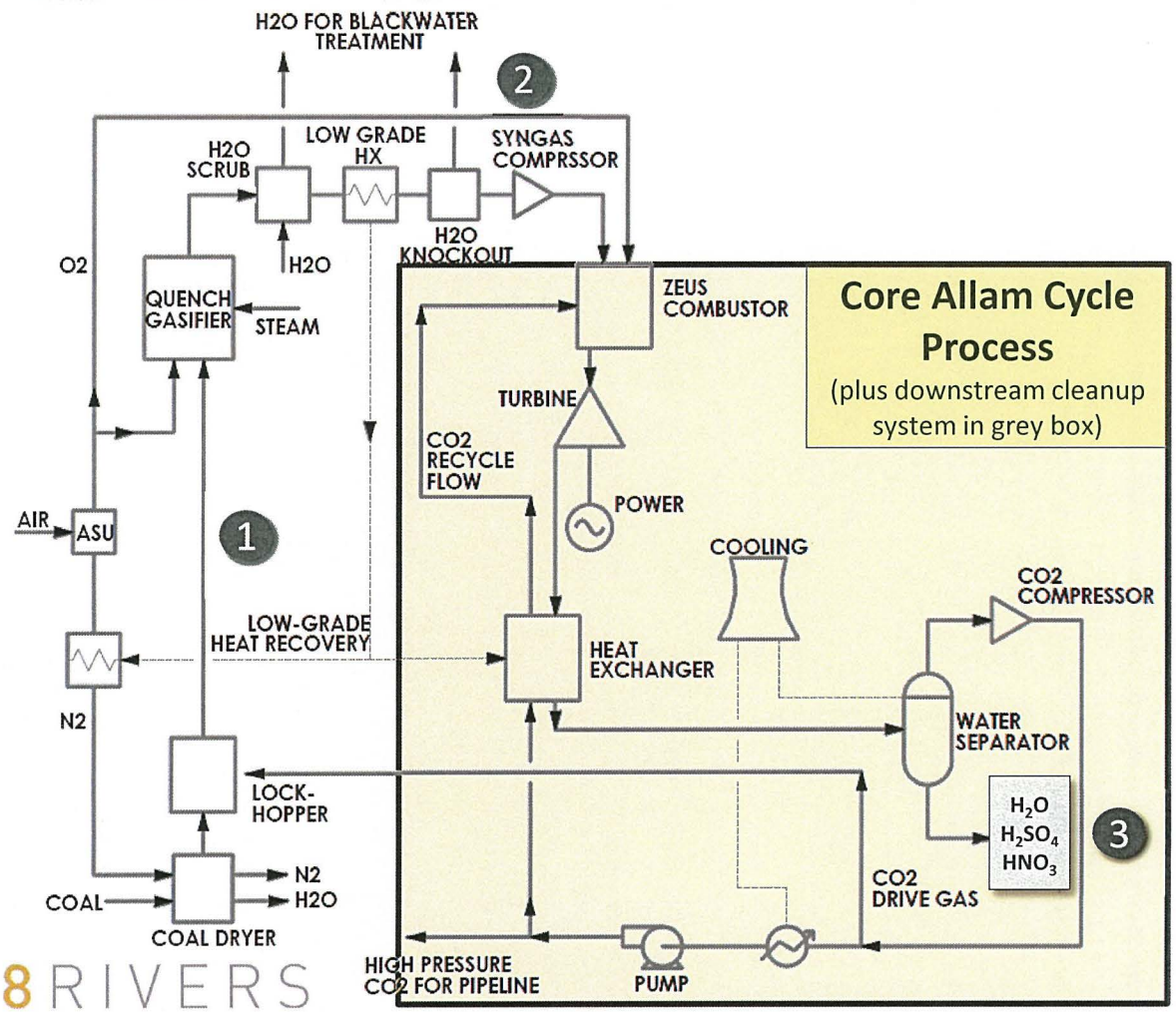

Efficiency (100% CCS)	LHV	HHV
Gross Turbine Output	76.3%	72.5%
Coal handling & milling	-0.2%	-0.2%
ASU	-10.2%	-9.7%
CO_2, Syngas Compressor	-9.1%	-8.7%
Other Auxiliaries (CO_2 pump, compressor, gasifier, etc.)	-6.5%	-6.1%
Net Efficiency	**50.3%**	**47.8%**

- High efficiency with existing gasifier technologies
- Minimal gasifier integration required, low complexity
- Overall process simplification

8 RIVERS

Contains the intellectual property of 8 Rivers Capital.

Development Pathway

From 8 Rivers: Need $30 million total to complete Stage 2 actions with

$15 million coming from North Dakota team

We are Here

Completed

STAGE 1

Technology Feasibility Study

Proof of Concept

2012-2014: $1 million

STAGE 2

Cycle and Key Component Design

Further R&D, Partnerships, Funding, Pilot Plant Design

2015-2018: $30 million

Metallurgy, Gas Cleanup, Gasifier Testing & Selection

Engineering Design Studies (Pre-FEED & FEED)

Commitments & Agreements

STAGE 3

Pilot Plant Construction

Prove the Technology

2019-2020 construction
2021-2025 initial operation
Cost: $200 to $400 million

Pilot Plant Initial Operation – 3 to 5 years

STAGE 4

Commercial Plant Partnerships, Funding, Design

Scale-up to Commercial Operation

Mid 2020s

Commercial Plant Construction and Operation

ALLETE